STEAL MY KISSES

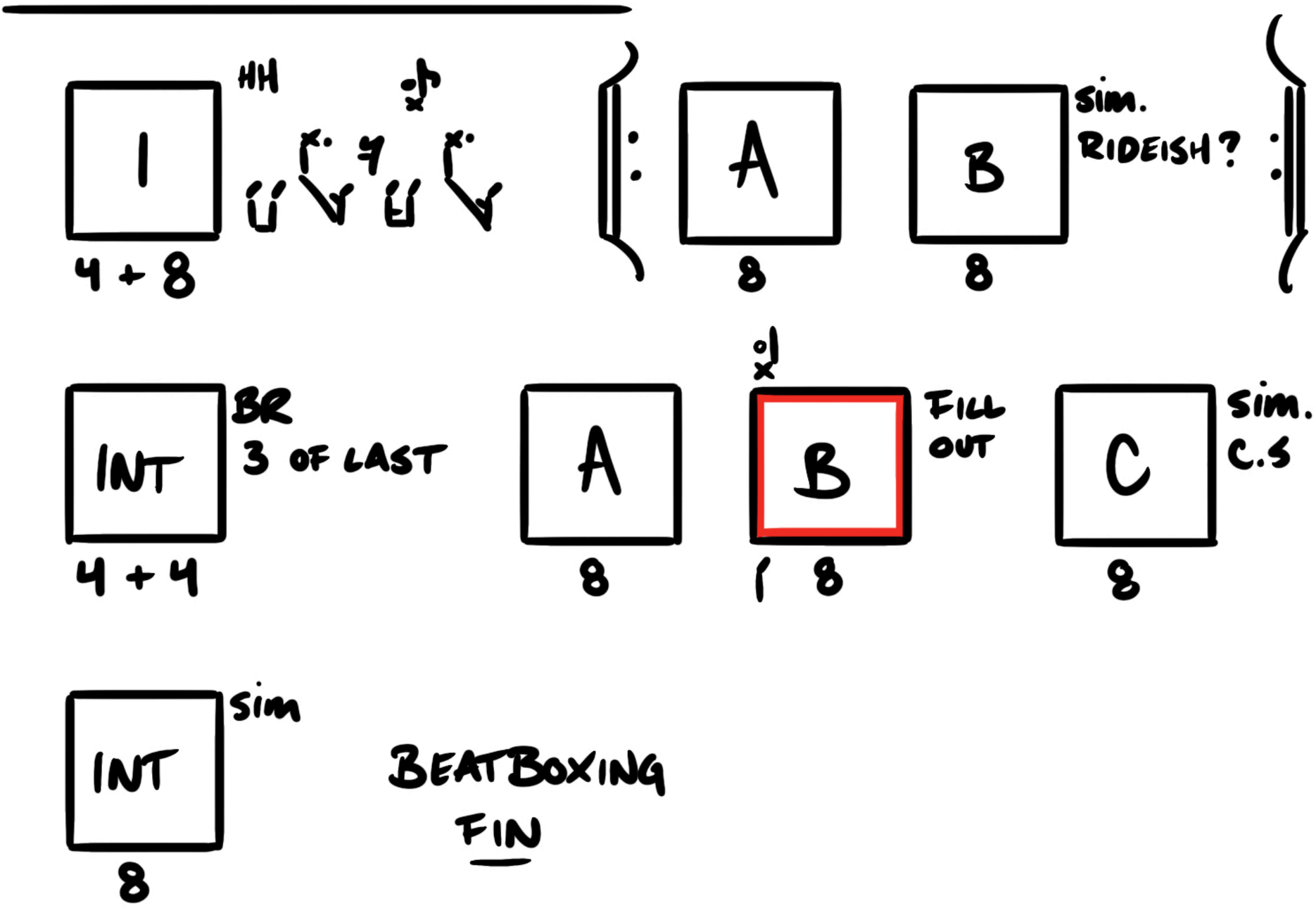

(?) SPEARHEAD

PEOPLE IN
THA MIDDLE
GRÜF
BREAKS
IN VERSES