MONTANA (6/8)

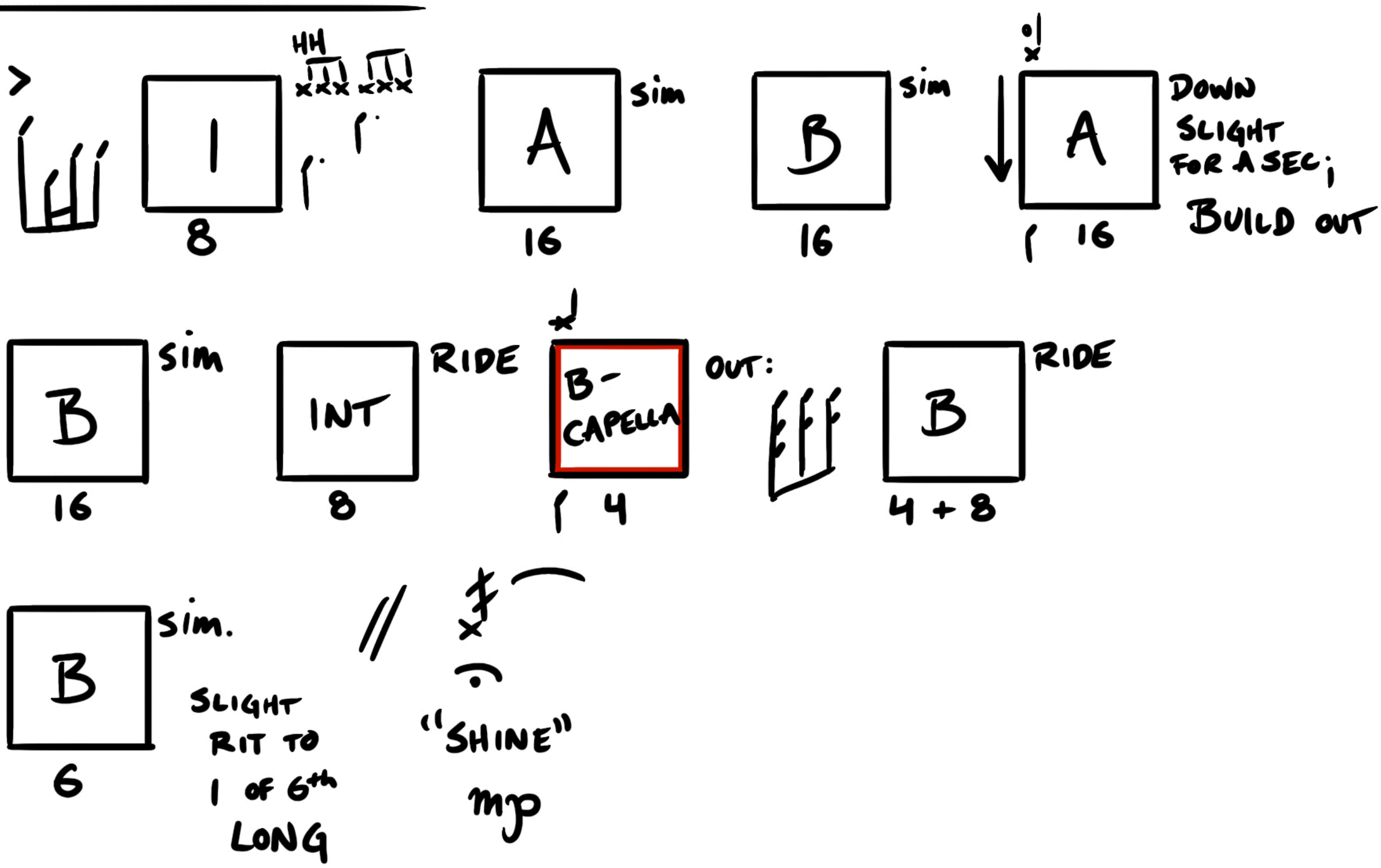
HH
1
8
A
sim
16
B
sim
16
A
DOWN SLIGHT FOR A SEC;
BUILD OUT
16
B
SIM
16
INT
RIDE
8
B-CAPELLA
OUT:
4
B
RIDE
4 + 8
B
sim.
6
SLIGHT RIT TO 1 OF 6th LONG
"SHINE"
mp