LIFE IS A HIGHWAY
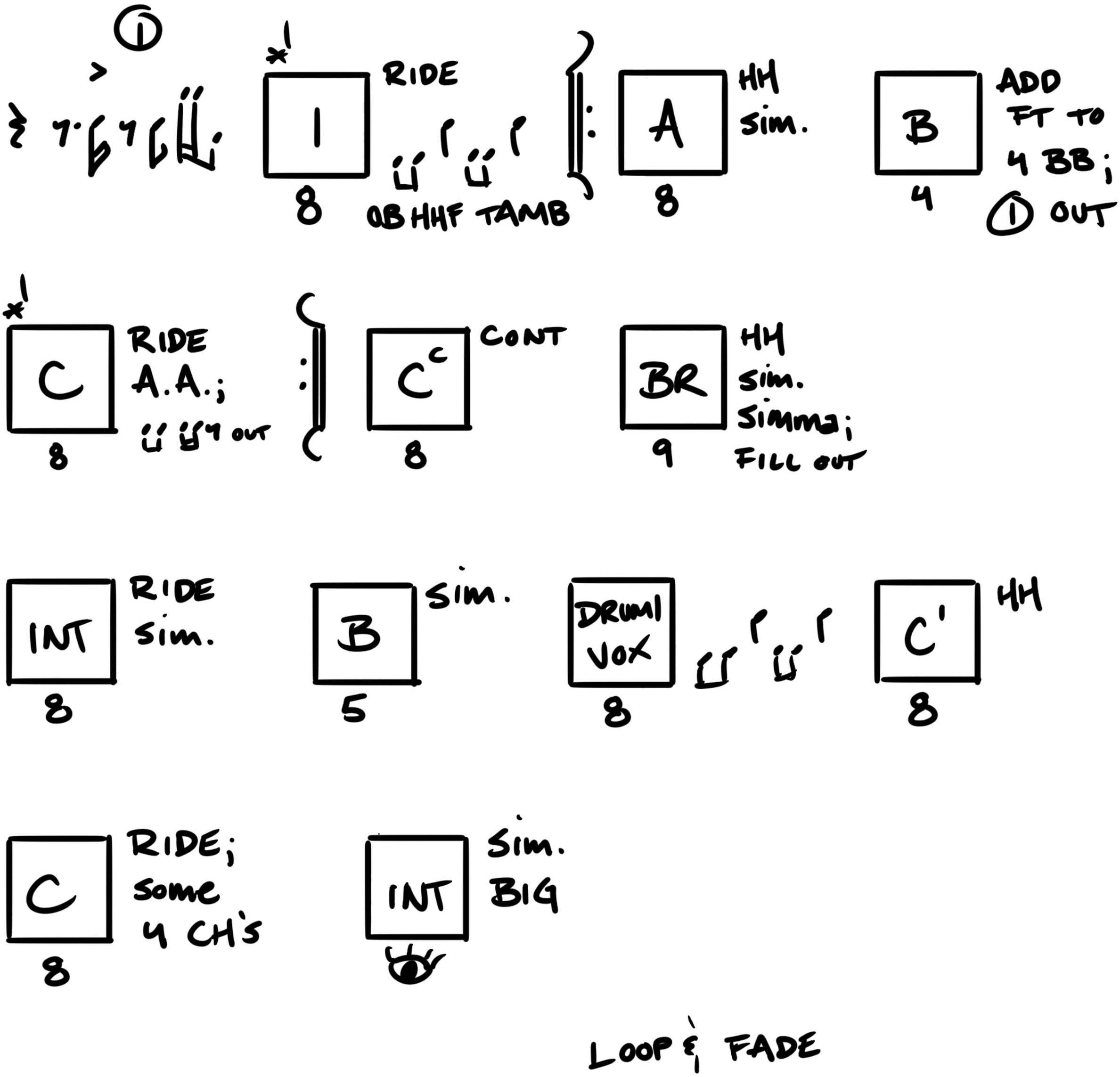
TAMB HH